Single balanced seal with reinforced sleeve and fixed bushing

FLUICART CB3T

Single cartridge seal with double hydraulic balancing, multiple springs outside the process and fixed containment bushing for low pressure vapour quench. Ideal for fluids that tend to crystallise on the atmosphere side and which require steam washing.
Simple installation thanks to the new Fluistrip positioning device and the flange slots which adapt to different stuffing boxes.
The reinforced sleeve tolerates higher shaft run-out and adapts to mixers, dryers or mills and also to assembly directly onto the pump shaft.

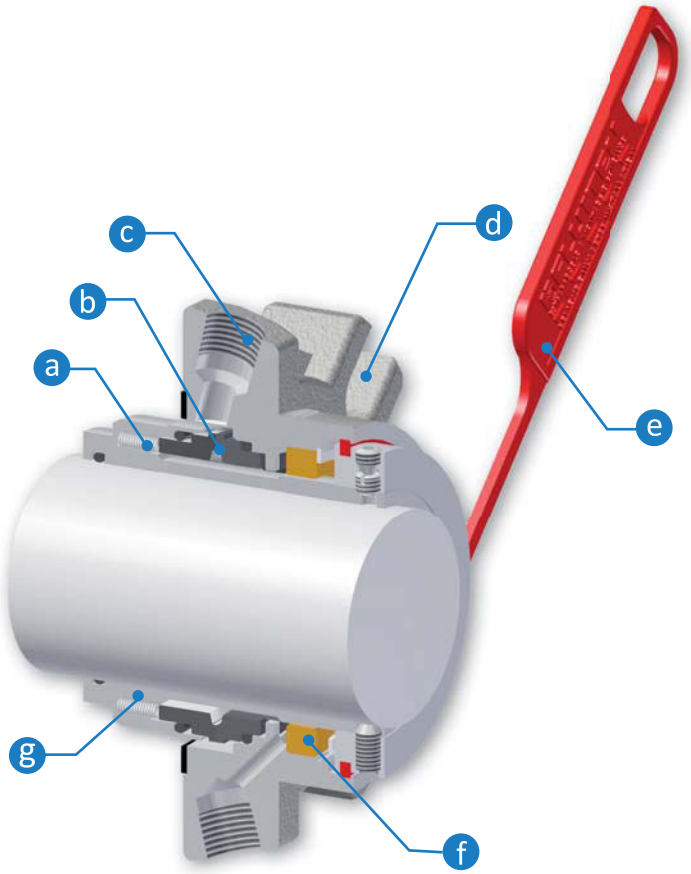

FEATURES

a) Springs outside the product and sliding drive device which compensates for possible movement to maintain contact with the rotating ring.

b) Double balanced seal for enhanced performance.

c) Flushing connections from pump discharge (PLAN 11/61 o PLAN 11/62) or flushing from external source (PLAN 32/61 o PLAN 32/62).

d) Slotted flange for more flexible mounting.

e) Fluistrip: positioning device for correct and easy installation, to be pulled off after assembly but before starting-up the machine.

f) Fixed auxiliary bushing for PLAN 61 (drainage of leakage with a dedicated connection) and PLAN 62 (quench).

g) Thicker sleeve to tolerate high run-out values and to prevent deformations during maintenance and assembly.

Operating limits

DIAMETER *[mm]*	**FROM 20 TO 90**
SPEED *[m/s]*	**≤ 12**
TEMPERATURE *[°C]*	**FROM -50 TO 250**
PROCESS PRESSURE *[bar]*	**VACUUM TO 25**

Operating conditions which differ from those indicated can be evaluated by our sales engineers. Speed and pressure values indicated are not strictly prescribed; they should be determined by calculating their PV while bearing in mind the temperature as well as the physical and chemical characteristics of the sealed fluid. Therefore it is not possible to combine maximum values of pressure, speed, temperature and shaft diameter.

FOOD INDUSTRY | CHEMICAL INDUSTRY | PHARMACEUTICAL INDUSTRY | OIL&GAS INDUSTRY | POWER INDUSTRY | BI-DIRECTIONAL | PUMPS | SIDE ENTRY

Images and dimensions may differ slightly from the standard configuration or refer to different markets. The product may be subject to technical or commercial modification without notification.

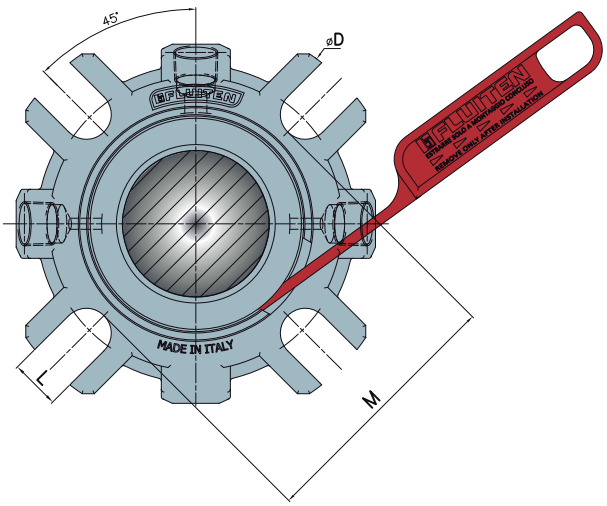

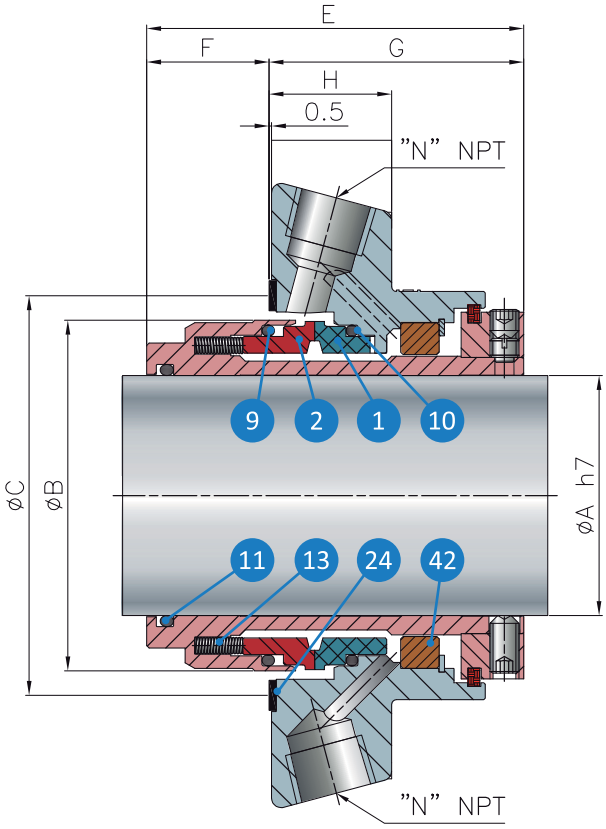

COMPONENT KEY (standard materials)

01 Solid stationary ring in graphite (Z11) or silicon carbide (U31) or tungsten carbide (K21)

02 Solid rotating ring in silicon carbide (U31) or tungsten carbide (K21)

09 Rotating ring gasket in FKM (V) or EPDM (D) or FFKM (G720)

10 Stationary ring gasket in FK6M (V) or EPDM (D) or FFKM (G720)

11 Product side sleeve gasket FKM (V) or EPDM (D) or FFKM (G720)

13 Springs in Hastelloy (I)

24 Flange gasket in Carbo Fiber (A2)

42 Bushing in bronze (B)

All other metal parts in AISI 316 (E)

"N" NPT: auxiliary liquid inlet/outlet connections

SEAL DIAMETER	øA	øB	øC Min	øC Max	øD	E	F	G	H	L	M	N
020	20	43	44	51	98	74,5	24,5	50	25,5	14	63	1/4”
022	22	46	47	52	98	74,5	24,5	50	25,5	14	63	1/4”
025	25	48	49	56	98	74,5	24,5	50	25,5	14	65	1/4”
028	28	50	51	57	106	74,5	24,5	50	25,5	14	67	1/4”
030	30	53	54	61,5	106	76,5	25,5	51	25,5	14	72	1/4”
032	32	56	57	66	120	77,5	25,5	52	25,5	14	76	1/4”
033	33	56	57	66	120	77,5	25,5	52	25,5	14	76	1/4”
035	35	58	59	68	120	77,5	25,5	52	25,5	14	76	1/4”
038	38	61	62	70,5	127	77,5	25,5	52	25,5	14	81	3/8”
040	40	63	64	73	135	77,5	25,5	52	25,5	14	81	3/8”
043	43	66	67	75	135	77,5	25,5	52	25,5	14	87	3/8”
045	45	68	69	78	148	78,5	25,5	53	25,5	14	87	3/8”
048	48	73	74	83	148	78,5	25,5	53	25,5	18	94	3/8”
050	50	73	74	83	148	78,5	25,5	53	25,5	18	94	3/8”
053	53	78	79	91	158	79,5	26	53,5	25,5	18	102	3/8”
055	55	78	79	91	158	79,5	26	53,5	25,5	18	102	3/8”
058	58	83	84,5	98,5	163	79,5	26	53,5	25,5	18	112	3/8”
060	60	83	84,5	98,5	163	79,5	26	53,5	25,5	18	112	3/8”
063	63	93	95	108	178	78	24,5	53,5	25,5	18	125	3/8”
065	65	93	95	108	178	78	24,5	53,5	25,5	18	125	3/8”
068	68	98	100	113	185	83,5	23,5	60	28,5	18	130	3/8”
070	70	105	107	118	193	92,5	29	63,5	28,5	18	135	3/8”
075	75	110	113	123	198	92,5	29	63,5	28,5	22	140	3/8”
080	80	115	118	130	205	92,5	29	63,5	28,5	22	145	3/8”
085	85	121	124	135	208	94,5	31	63,5	28,5	22	150	3/8”
090	90	126	129	140	218	94,5	31	63,5	28,5	22	155	3/8”

All the measures are expressed in millimeters. For measurements differing from those listed or measurements in inches, please contact our Technical Sales Department at info@fluiten.it